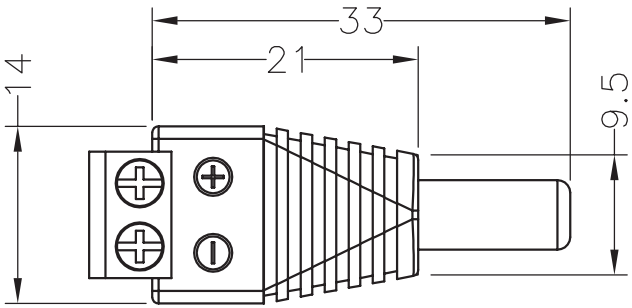

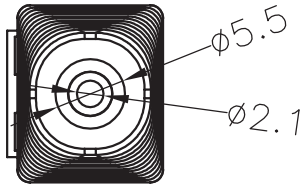

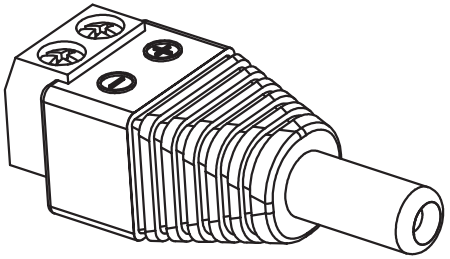

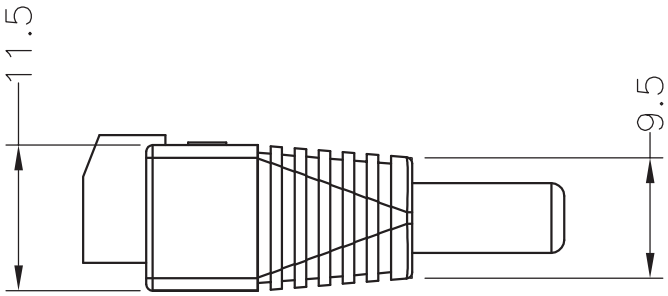

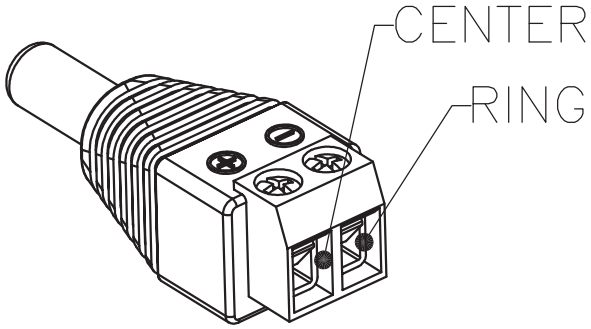

Partname:
Adapter DC Female to terminal block

Electrical Character:

1> 100% open&short testing
2> With understanding voltage:DC 300 V 0.01 Sec.
3> Insulation Resistance: 10M Ohm (Min)
4> Conductive Resistance: 2 Ohm(Max)

Material:

1> Inner Mold: PE Low Density
2> Over Mold: PVC 30 Pa Black color

DELOCK
we move the world

Dat	2011 / 06 / 01	Title:	Adapter DC male 2.1 x 5.5 mm > Terminal Block 2 Pin
Unit	mm	Item no.	65396
Projection		Barcode	4043619653966
Rev	A	File No.	88066